ADJUSTMENT

1. INSPECT BACK DOOR PANEL SUB-ASSEMBLY

(a) Check that the clearance measurements of areas A to D are within the standard range.

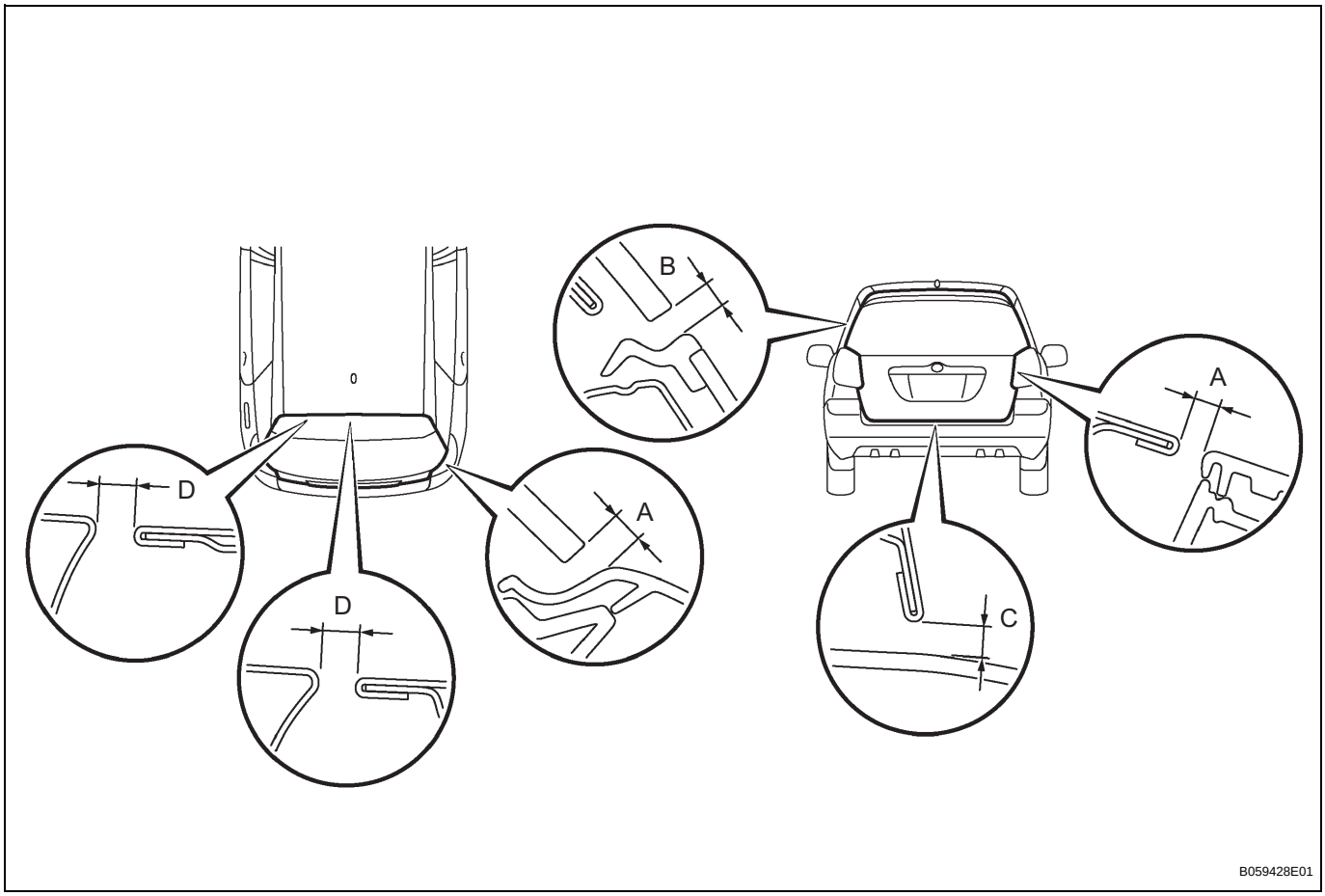

Standard clearance

Area	Measurement
A	3.5 to 6.5 mm (0.138 to 0.256 in.)
B	4.5 to 7.5 mm (0.177 to 0.295 in.)
C	5.0 to 8.0 mm (0.197 to 0.315 in.)
D	6.0 to 9.0 mm (0.236 to 0.354 in.)

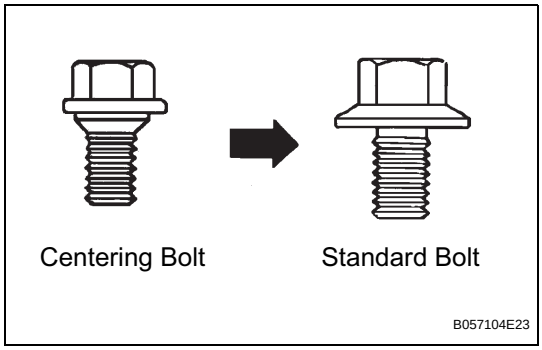

2. REMOVE BOLT

(a) Remove the bolt.

HINT:

- Centering bolts are used to mount the door hinge to the vehicle body and door. The door cannot be adjusted with the centering bolts on. Substitute the centering bolts with standard bolts (with washers) when making adjustments.
- A bolt without a torque specification is shown in the standard bolt chart (See page IP-5).

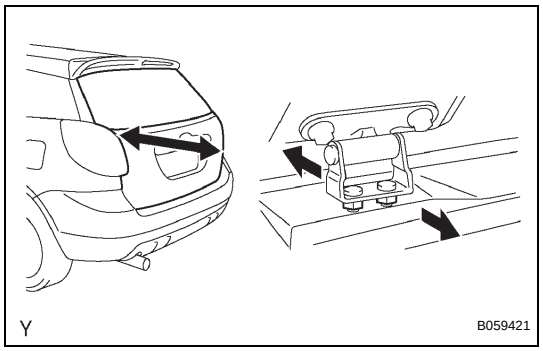

3. ADJUST BACK DOOR PANEL SUB-ASSEMBLY

(a) Remove the roof headlining (See page IR-5).

(b) Loosen the body side's hinge nuts and adjust the door's position.

(c) Tighten the body side's hinge nuts after the adjustment.
Torque: 19.5 N*m (199 kgf*cm, 14 ft.*lbf)

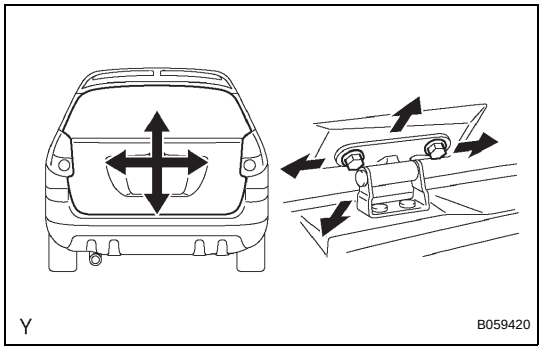

(d) Loosen the door side's hinge bolts and adjust the door's position.

(e) Tighten the door side's hinge bolts after the adjustment.
Torque: 19.5 N*m (199 kgf*cm, 14 ft.*lbf)

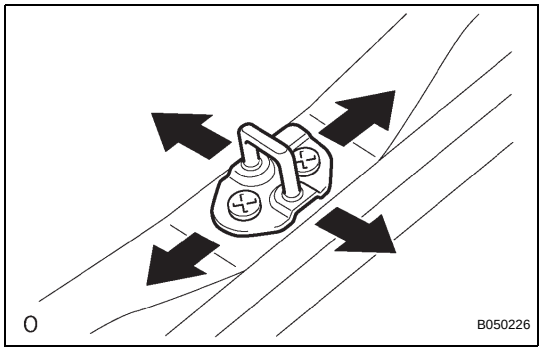

(f) Adjust the back door lock striker.

(1) Remove the rear floor finish plate (See page ET-8).

(2) Check that the door fit and door linkage are adjusted correctly.

(3) Adjust the striker by loosening the striker mounting screws.
Torque: 11.5 N*m (117 kgf*cm, 8.5 ft.*lbf)

(4) Using a plastic-faced hammer, tap the striker for adjustment.